DC-DC

■

XT1871 ↓ ج ᴡ
PFM ᒪ ᐧ ᐧ DC-DC ᐟ ᑕ
XT1871 ↓ ج 3 ᑕ , ᐧ ᐧ
ᐧ

■

1~3

LED LED
ᐧ MP3
ᐯ ᑕ
ᑕ ᑕ ᑕ
VCR PDA

■

94%
300KHz
10μA
₮ ᐧ 1.8V 5.0V 0.1V
₮ ± 2.5%
ᐧ

■

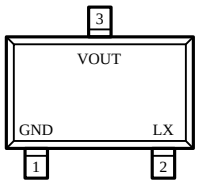

SOT23-3L/B
(TOP VIEW)

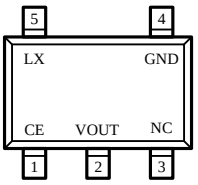

SOT23-5L
(TOP VIEW)

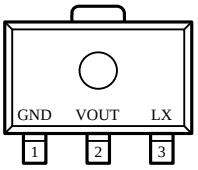

SOT89-3L
(TOP VIEW)

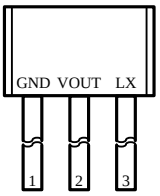

TO-92
(FRONT VIEW)

■

TO-92	SOT23-5L	SOT89-3L	SOT23-3L/B		
3	5	3	2	LX	
2	2	2	3	VOUT	

■

	V_{max}	V_{OUT} V_{LX}	6.5	V
	ILXmax	LX	1000	mA
	P_D	SOT23-3L /SOT23-5L	350	mW
		TO-92/SOT89-3L	500	
		SOT23-3B	150	
	Tmin-max		-40—85	°C
	Tstorage		-40—165	
ESD	V_{ESD}		4000	V

■

(TA=25 unless otherwise noted)

9. VS

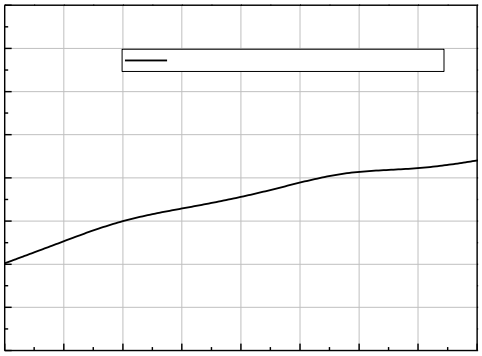

10. \l VS

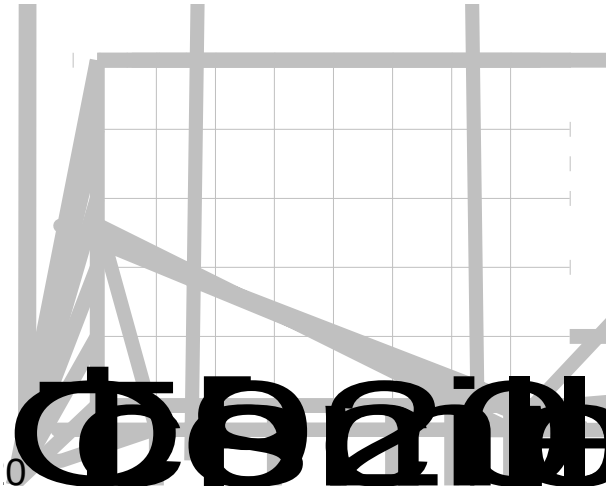

11. ₹ ㄔ VS

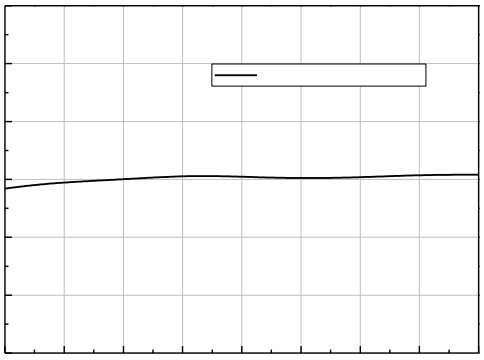

12. VS

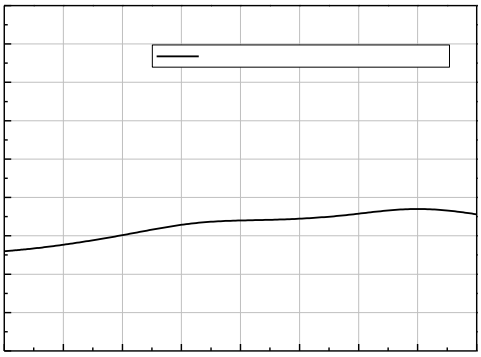

13. CE Ω ㄔ VS

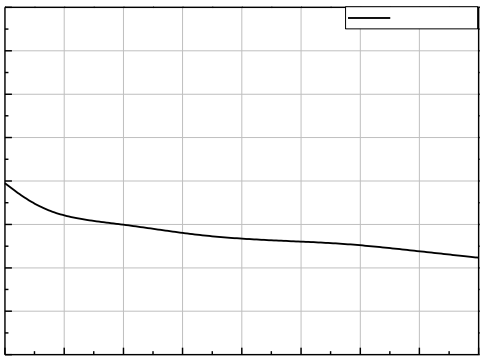

SOT23-3B

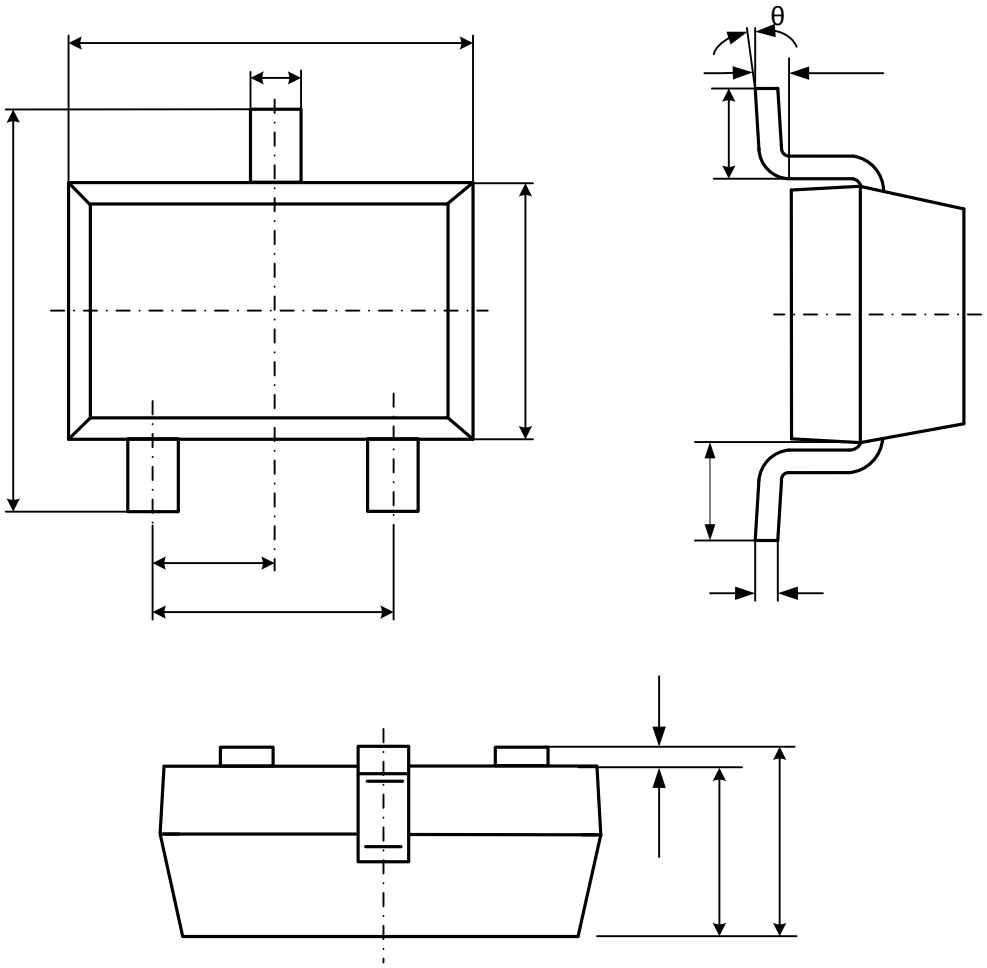

Symbol	Dimensions In Millimeters		Dimensions In Inches	
	Min	Max	Min	Max
A	0.900	1.150	0.035	0.045
A1	0.000	0.100	0.000	0.004
A2	0.900	1.050	0.035	0.041
b	0.300	0.500	0.012	0.020
c	0.080	0.150	0.003	0.006
D	2.800	3.000	0.110	0.118
E	1.200	1.400	0.047	0.055
E1	2.250	2.550	0.089	0.100
e	0.950(BSC)		0.037(BSC)	
e1	1.800	2.000	0.071	0.079
L	0.300	0.600	0.012	0.024
	0 °	8 °	0 °	8 °

SOT23-5L

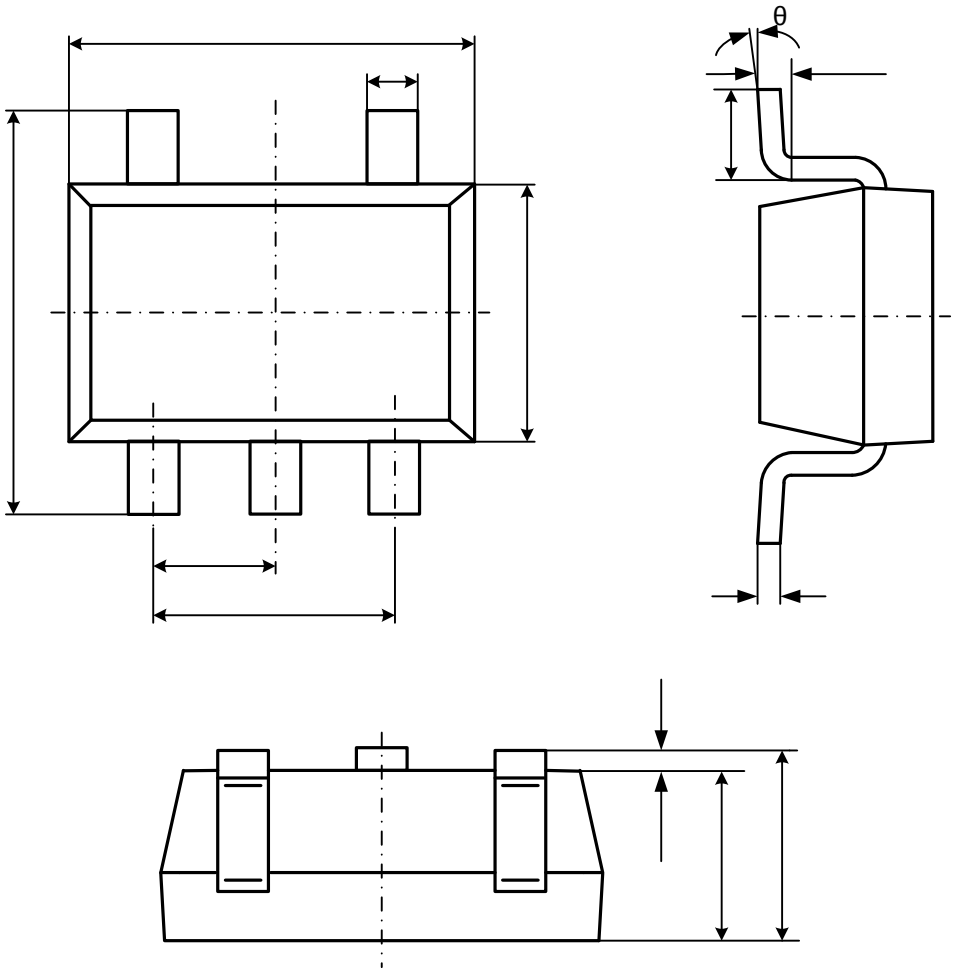

Symbol	Dimensions In Millimeters		Dimensions In Inches	
	Min	Max	Min	Max
A	1.050	1.250	0.041	0.049
A1	0.000	0.100	0.000	0.004
A2	1.050	1.150	0.041	0.045

SOT89-3L

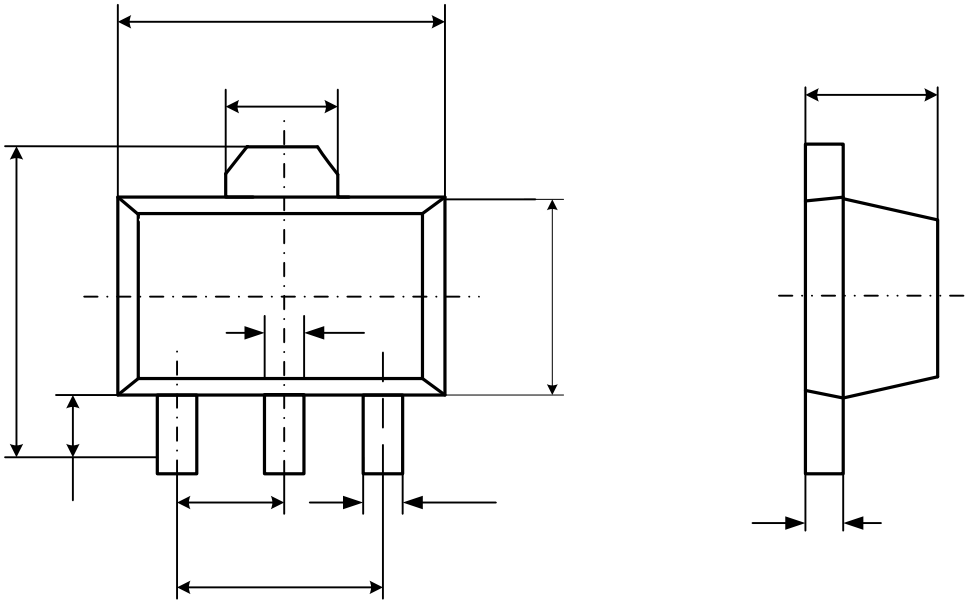

Symbol	Dimensions In Millimeters		Dimensions In Inches	
	Min	Max	Min	Max
A	1.400	1.600	0.055	0.063
b	0.320	0.520	0.013	0.020
b1	0.400	0.580	0.016	0.023
c	0.350	0.400	0.014	0.017
D	4.400	4.600	0.173	0.181
D1	1.550REF.		0.061REF.	
E	2.300	2.600	0.091	0.102
E1	3.940	4.250	0.155	0.167
e	1.500TYP		0.060TYP	
e1	3.000TYP		0.118TYP	
L	0.900	1.200	0.035	0.047