1.0A USB

XT4077 /

XT4077

USB 1.0A

4.2V

USB

XT4077

0.1μA ,

MOSFET

/

XT4077

20uA

XT4077 8 ESOP8

[A)]1 TET EMC /P <</MCID 86/ 1 <</MCID 20>> BDC BT/F3 9 Tf1 0 0 1 19624 333.77 Tm[ )]TET EMC /P 1 0 0 1 455./MCID 13>> BDC BT TmK0A1F3

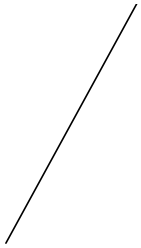

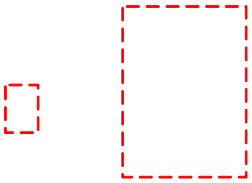

R0 2-5

XT4077 -

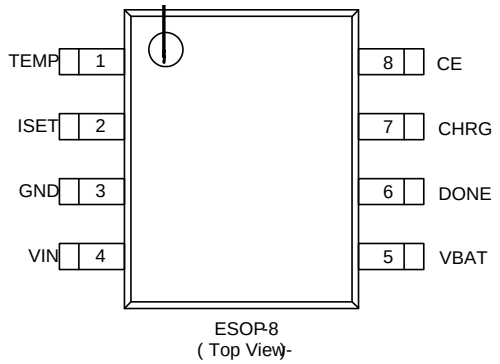

TEMP 1

TEMP 30% 60%

ISET 2

1%

$$I_{BAT} = (V_{ISET}/R_{ISET}) \times 960$$

ISET 3μA ISET

1.21V

	V_{cc}	-0.3 +7	V
ISET	V_{ISET}	-0.3 V_{IN}+0.3	
BAT	Vbat	-0.3 6	
DONE	Vdone	-0.3 +7	
CHAG	Vchrg	-0.3 +7	
BAT	Ibat	1500	mA
	Topa	-40 +85	°C
	Tstr	-65 +125	

(Ta=25)

	Vcc	-	4.25	-	5.5	V
	Icc	Charge mode,Riset=10K	-	200	2000	μA
		Standby mode	-	20	30	μA
		Shutdown mode1(Riset not connected,Vcc<Vbat or Vcc<Vuv)	-	50	100	μA
		Shutdown mode1 CE=0		20		μA
	Vfloat	0 TA 85 ,IBAT=40mA	4.16	4.2	4.25	V
BAT	Ibat	Riset=10k,Current mode	86	96	106	mA
		Riset=1k,Current mode	882	960	1038	mA
		Standby mode,Vbat=4.2V	0	-2.5	-6	μA
		Shutdown mode	-	-	1	μA
		Sleep mode,Vcc=0V	-	-	0.1	μA
	Itrikl	Vbat<Vtrikl,Rprog=2k	76	96	116	mA
	Vtrikl	Riset=10K Vbat Rising	2.8	2.9	3.0	V
	Vtrhys	Riset=10k	60	80	120	mV
	Vuv	From Vcc low to high	3.7	3.8	3.93	V
	Vuvhys	-	150	200	300	mV

1 BAT

2 BAT

ISET= 960V / R_{ISET} ISET RISET ISET

500 R_{ISET} = 960V/0.5A = 1.98K

R_{ISET} 1%

ESOP8

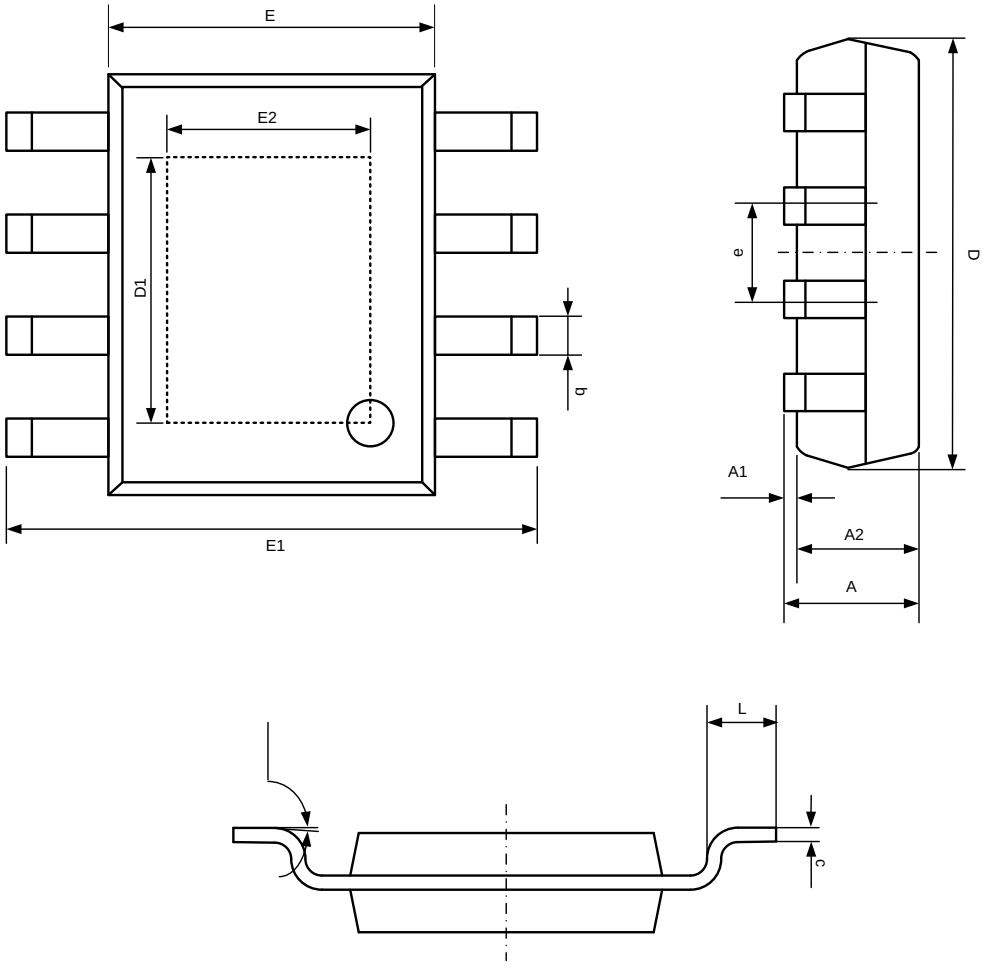

Symbol	Dimensions In Millimeters		Dimensions In Inches	
	Min	Max	Min	Max
A	1.350	1.750	0.053	0.069