■

XT4057 /

XT4057 USB
MOSFET

4.2V
1/10
XT4057 USB
XT4057
2μA XT4057 2
/ 25μA/
XT4057
IC
Î Ï /

■

■

		K	
		42	4.2V
		1	1%
		M	SOT-23-6L
		R	
		L	

VIN 4.25V 6.5V 1µF BAT

VIN 30 mV XT4057 BAT 2µA

DONE N MOSFET

DONE

1%

1V IBAT = (VPROG/RPROG) 1000

PROG 3µA PROG 1.21V

25µA 2.4V

1.5 mA PROG

■

●

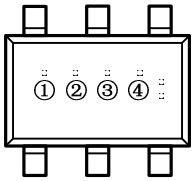

SOT-23-6L
(TOP VIEW)

■

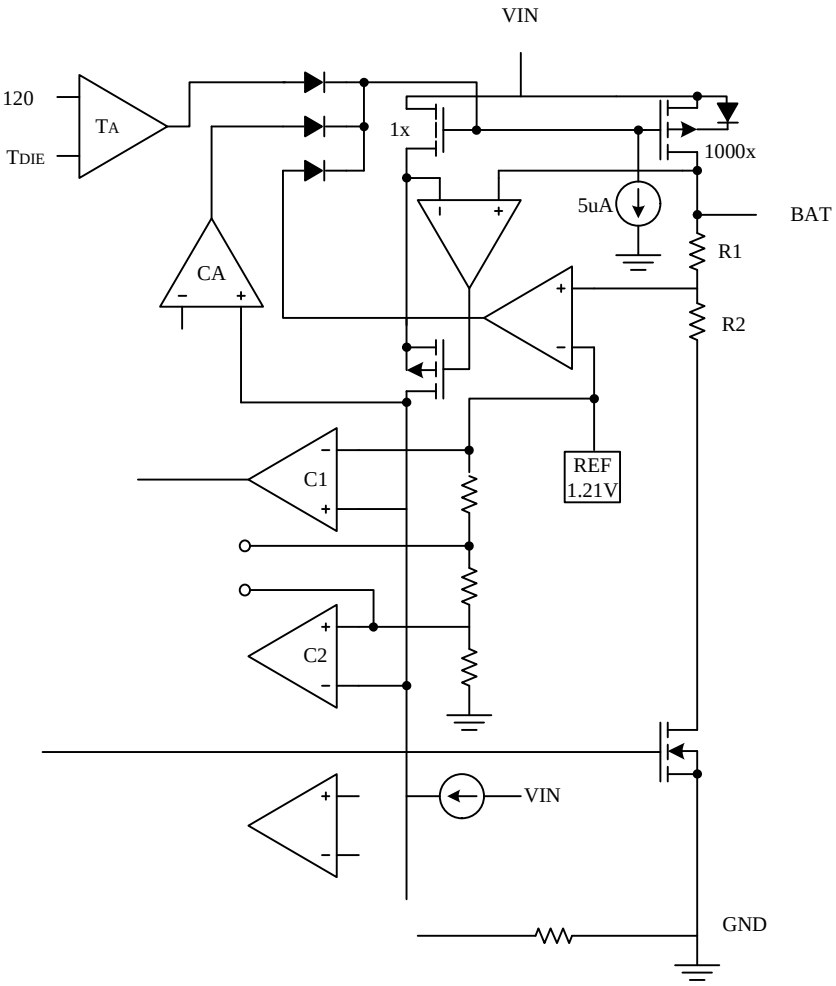
VIN
120
TA
TDIE
1x
1000x
5uA
BAT
R1
R2
CA
C1
C2
REF
1.21V
VIN
GND

■

1. VS BAT

7. PROG VS

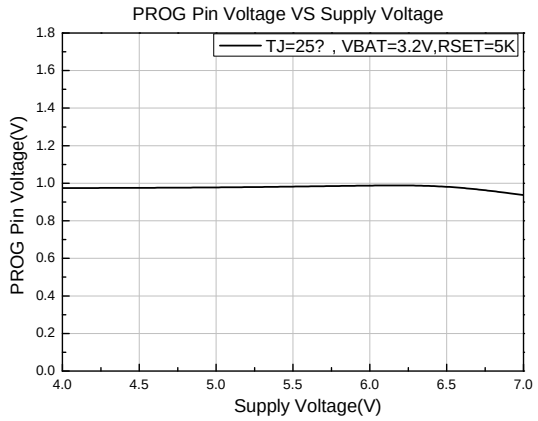

8. VS

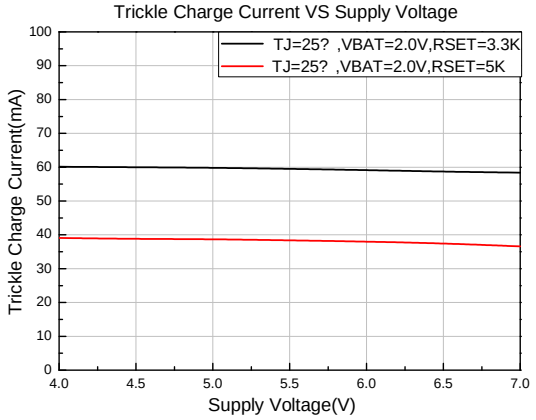

9. VBAT VS

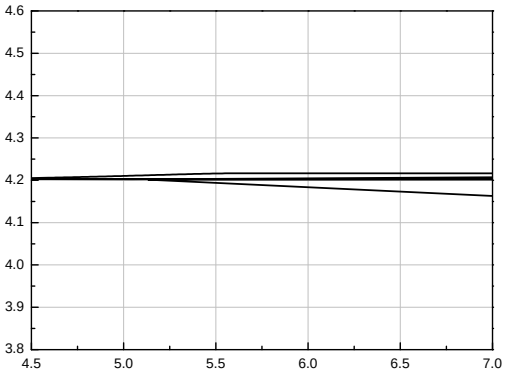

13. VS

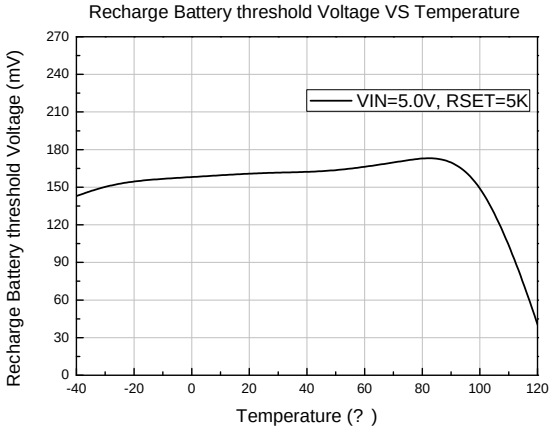

14. CHARGW VS

