■

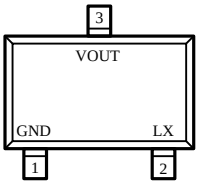

SOT23-3L/B
(TOP VIEW)

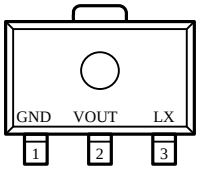

SOT89-3L
(TOP VIEW)

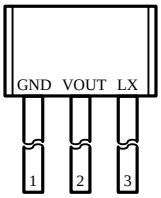

TO-92
(FRONT VIEW)

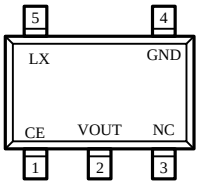

SOT23-5L
(TOP VIEW)

■

TO-92	**SOT23-5L**	**SOT89-3L**	**SOT23-3L**		
3	5	3	2	LX	
2	2	2	3	VOUT	
1	4	1	1	GND	
-	1	-	-	CE	
-	3	-	-	NC	

■

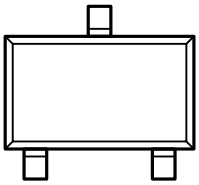

SOT23-3L/B
(TOP VIEW)

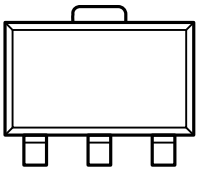

SOT89-3L
(TOP VIEW)

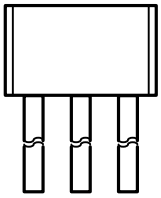

TO-92
(FRONT VIEW)

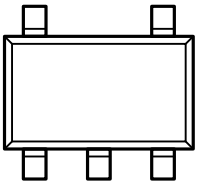

SOT23-5L
(TOP VIEW)

C	XT1873B*****

■

	V_{max}	V_{OUT} V_{LX}	6.5	V
	ILXmax	LX	1000	mA
		SOT23-3L /SOT23-5L	350	
	P_D	TO-92/SOT89-3L	5387.67 617.	mW

■

SOT23-3L

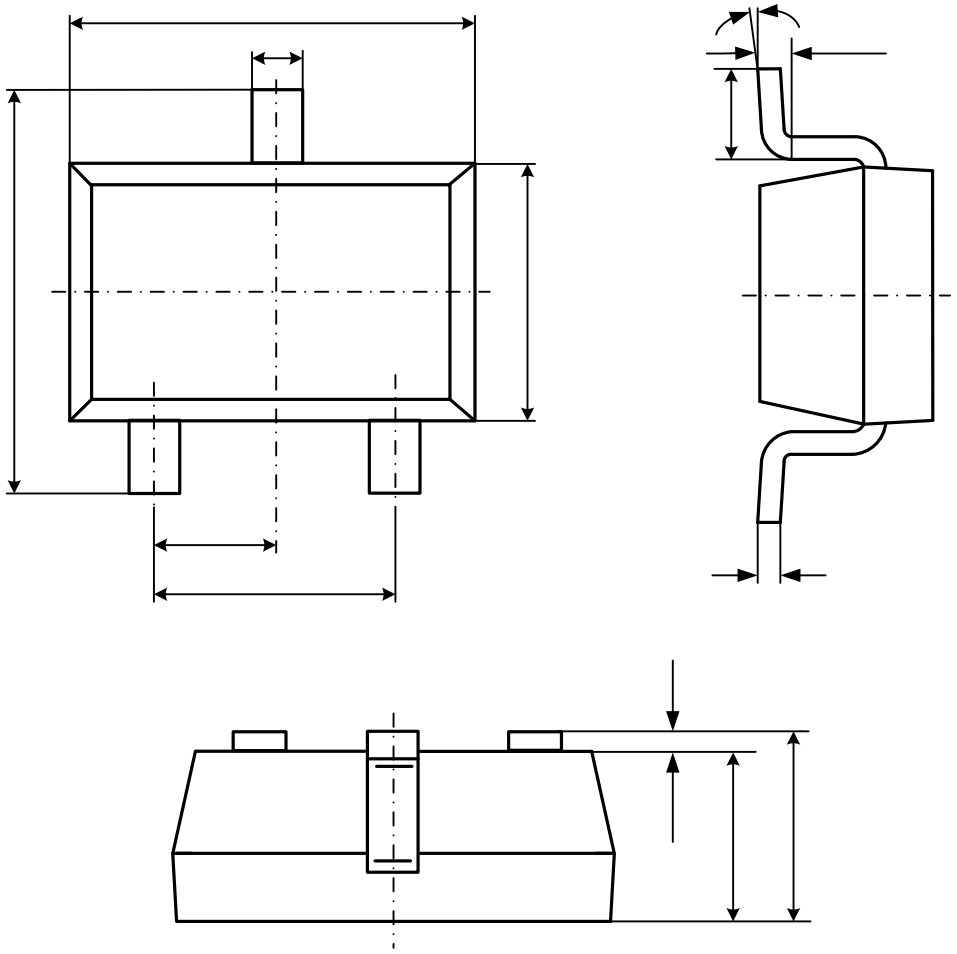

Symbol	Dimensions In Millimeters		Dimensions In Inches	
	Min	Max	Min	Max
A	1.050	1.250	0.041	0.049
A1	0.000	0.100	0.000	0.004
A2	1.050	1.150	0.041	0.045
b	0.300	0.500	0.012	0.020
c	0.100	0.200	0.004	0.008
D	2.820	3.020	0.111	0.119
E	1.500	1.700	0.059	0.067
E1	2.650	2.950	0.104	0.116
e	0.950(BSC)		0.037(BSC)	
e1	1.800	2.000	0.071	0.079
L	0.300	0.600	0.012	0.024
	0	8	0	8

TO-92

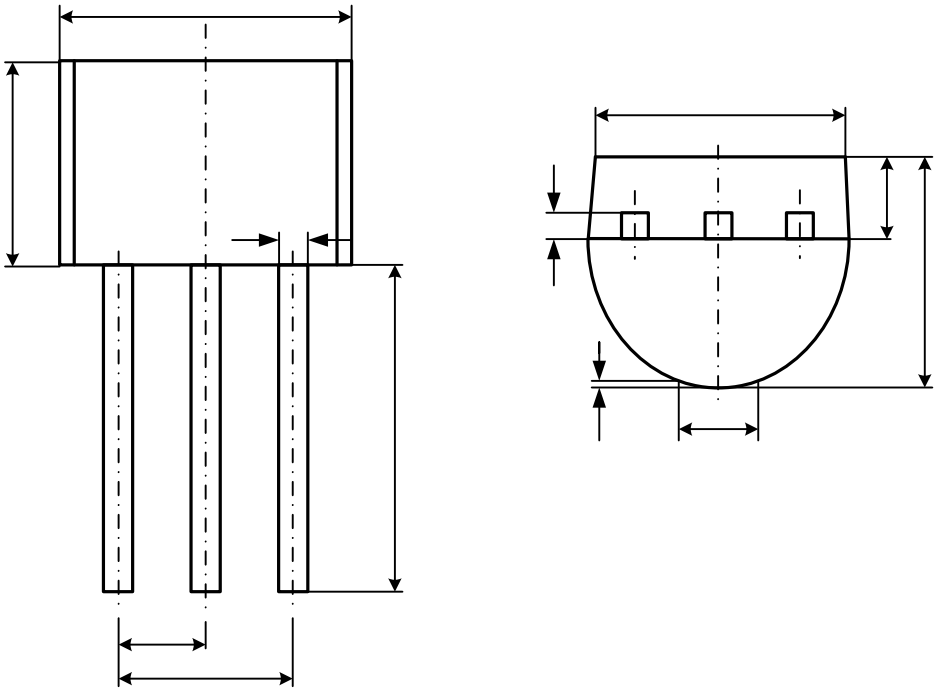

Symbol	Dimensions In Millimeters		Dimensions In Inches	
	Min	Max	Min	Max
A	3.300	3.700	0.130	0.146
A1	1.100	1.400	0.043	0.055
b	0.380	0.550	0.015	0.022
c	0.360	0.510	0.014	0.020
D	4.400	4.700	0.173	0.185
D1	3.430		0.135	
E	4.300	4.700	0.169	0.185
e	1.270TYP		0.050TYP	
e1	2.440	2.640	0.096	0.104
L	14.100	14.500	0.555	0.571
		1.600		0.063
h	0.000	0.380	0.000	0.015

SOT23-5L

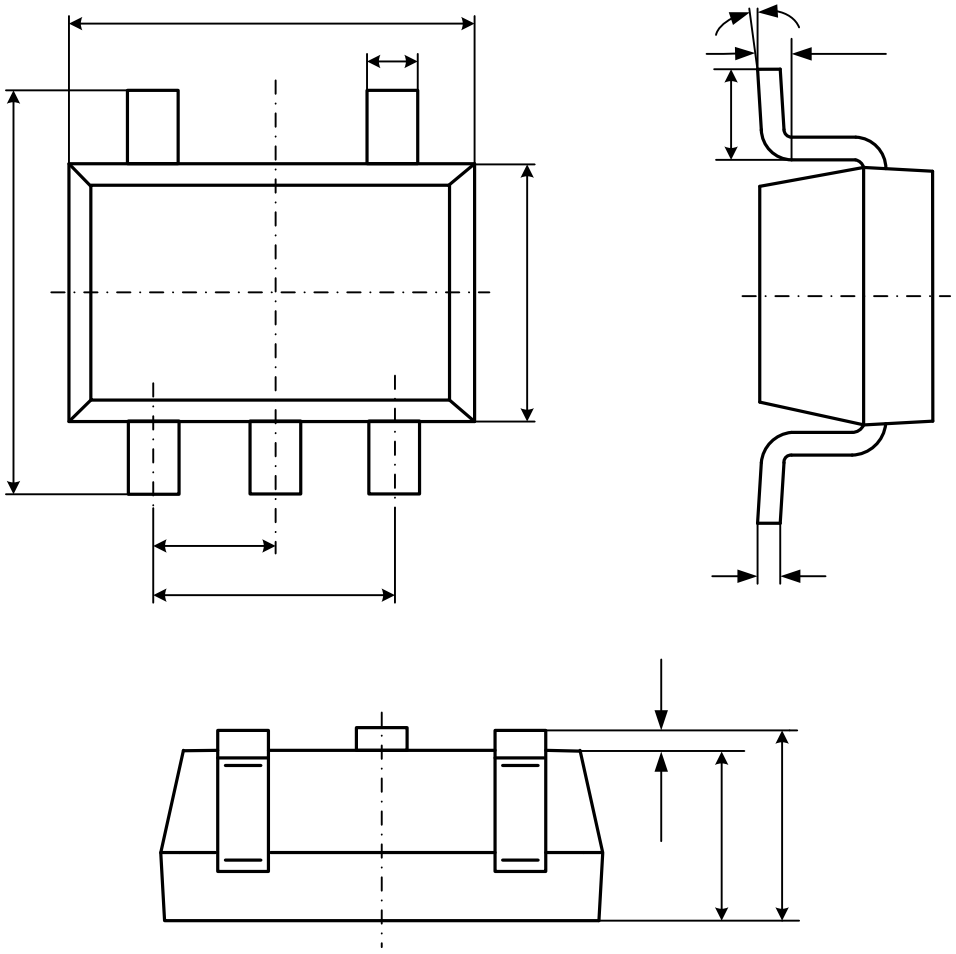

Symbol	Dimensions In Millimeters		Dimensions In Inches	
	Min	Max	Min	Max
A	1.050	1.250	0.041	0.049
A1	0.000	[redacted]	0.000	0.004
A2	1.050	1.150	0.041	0.045
b	0.300	0.500	0.012	0.020

SOT89-3L

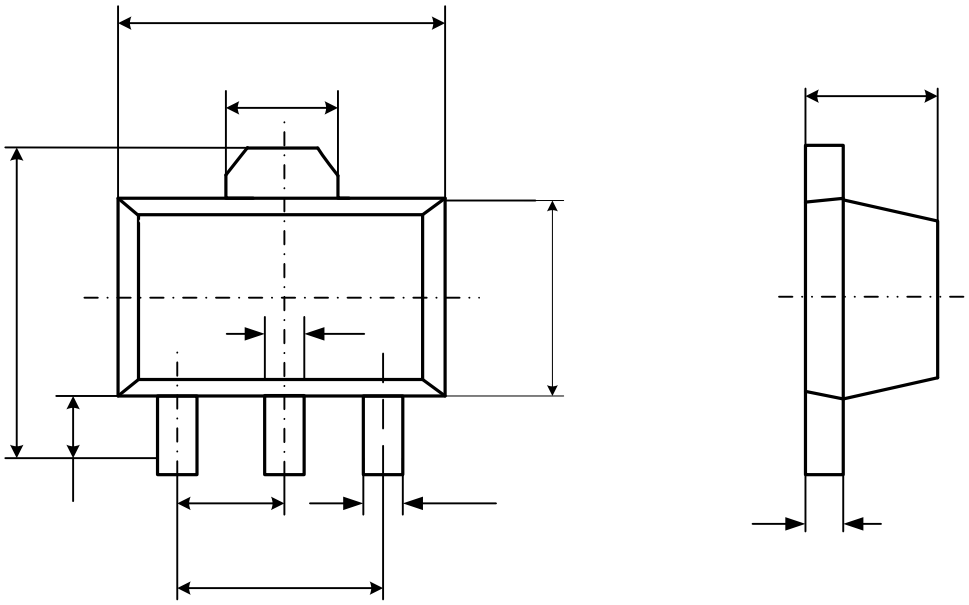

Symbol	Dimensions In Millimeters		Dimensions In Inches	
	Min	Max	Min	Max
A	1.400	1.600	0.055	0.063
b	0.320	0.520	0.013	0.020
b1	0.400	0.580	0.016	0.023
c	0.350	0.400	0.014	0.017
D	4.400	4.600	0.173	0.181
D1	1.550REF.		0.061REF.	
E	2.300	2.600	0.091	0.102
E1	3.940	4.250	0.155	0.167
e	1.500TYP		0.060TYP	
e1	3.000TYP		0.118TYP	
L	0.900	1.200	0.035	0.047