CMOS

■

LN4913 CMOS

IC

LN4913

LN4913

■

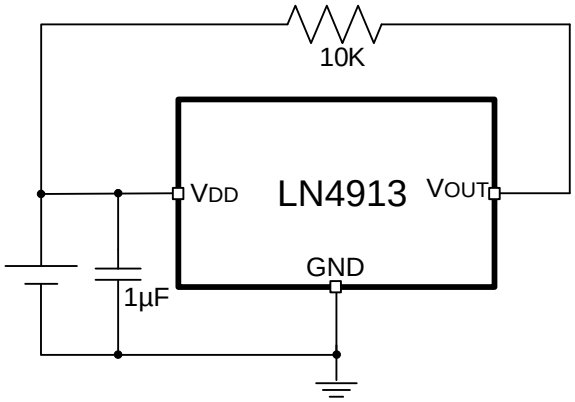

■

■

T_{MIN} A MAX A

1.65 DD 6.0V

■

1.65V 5.5V

■

■

SOT-23-3

TSOT-23-3

TO-92S

DFN2015-6

DFN2*2-3

■

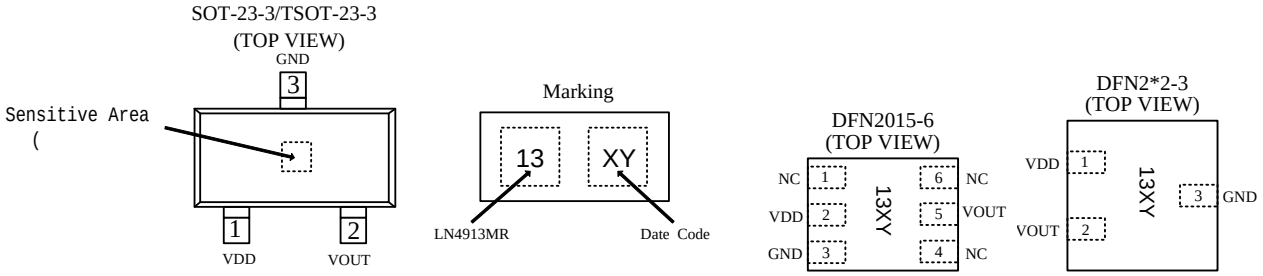

SOT-23-3/TSOT-23-3	**DFN2015-6**	**DFNWB2×2-3L**		
2	5	2	VOUT	
3	3	3	GND	
1	2	1	VDD	
-	4,6	-	NC	

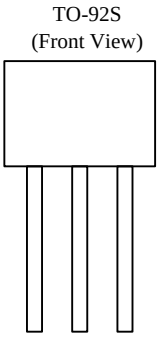

		PIN			
		1	**2**	**3**	
LN4913TR	TO-92S	VDD	VOUT	GND	4913
LN4913SRA	TO-92S	VOUT	GND	VDD	4913A
LN4913SRB	TO-92S	VDD	GND	VOUT	4913B

■

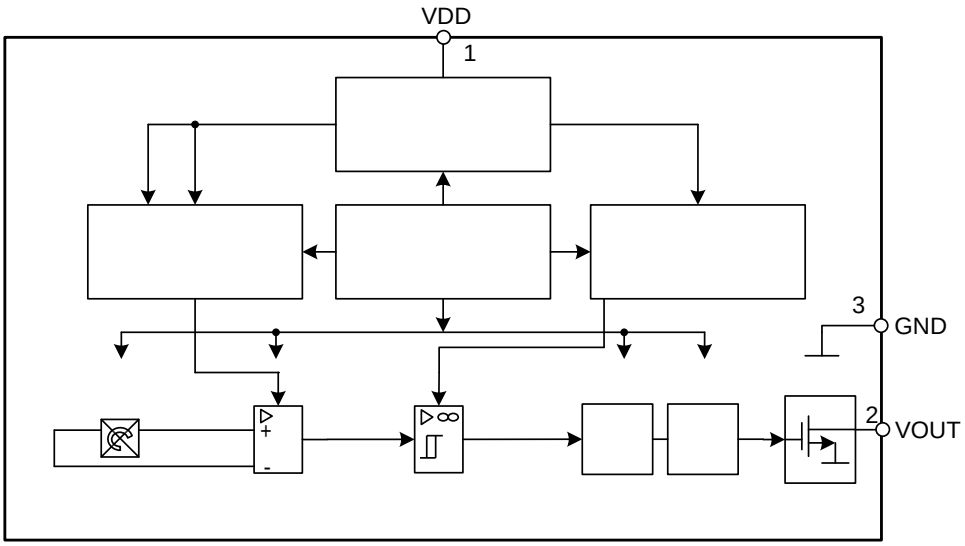

■

	V_{DD}	-0.3 6.0	V
	I_{DD}	-1 4.5	mA
	V_{OUIT}	-0.3 6.0	V
	I_{OUT}	-1 2	mA
	Tstg	-45 150	
		-150	
ESD		4000	V

■

AC/DC VDD=3V T_a=25

V_{DD}			1.65		6.0	V
I_{SAVG}						

■

Vdd(V)=2.7V时，Isopavg—TA曲线

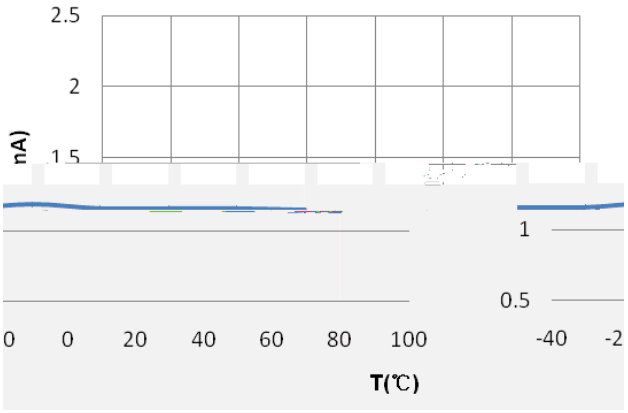

TA=20℃,Isopavg—Vdd曲线

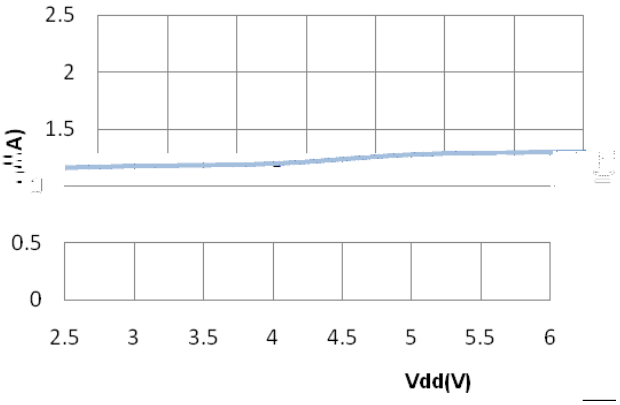

Vdd=2.7V,Isstb—TA曲线

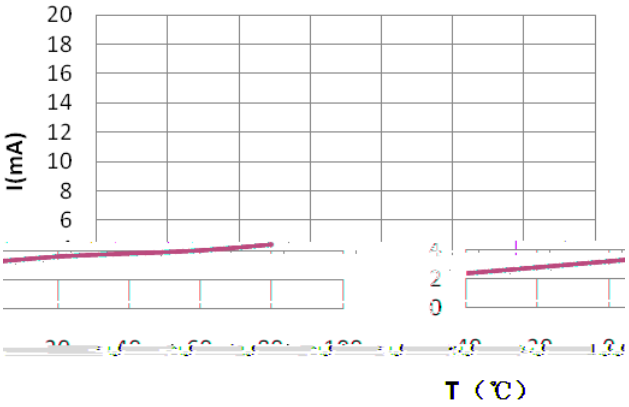

TA=20℃,Isstb—Vdd曲线

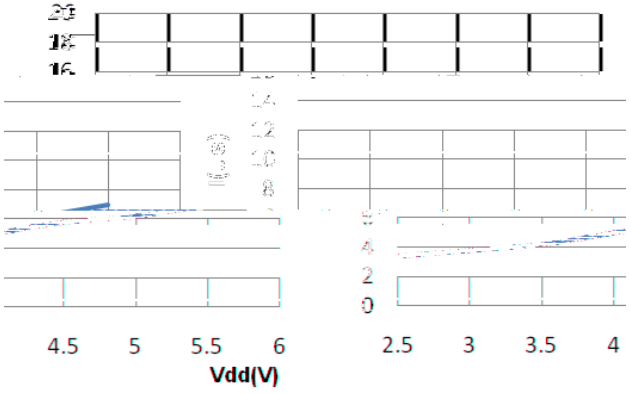

Iout =1mA时，VQSAT—TA曲线

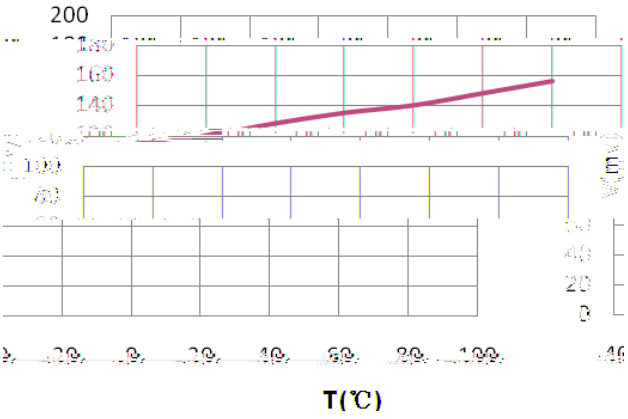

Vdd=2.7V,tstb—TA

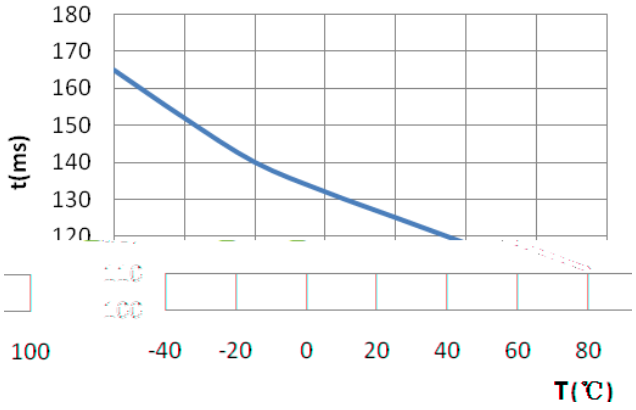

■

SOT-23-3

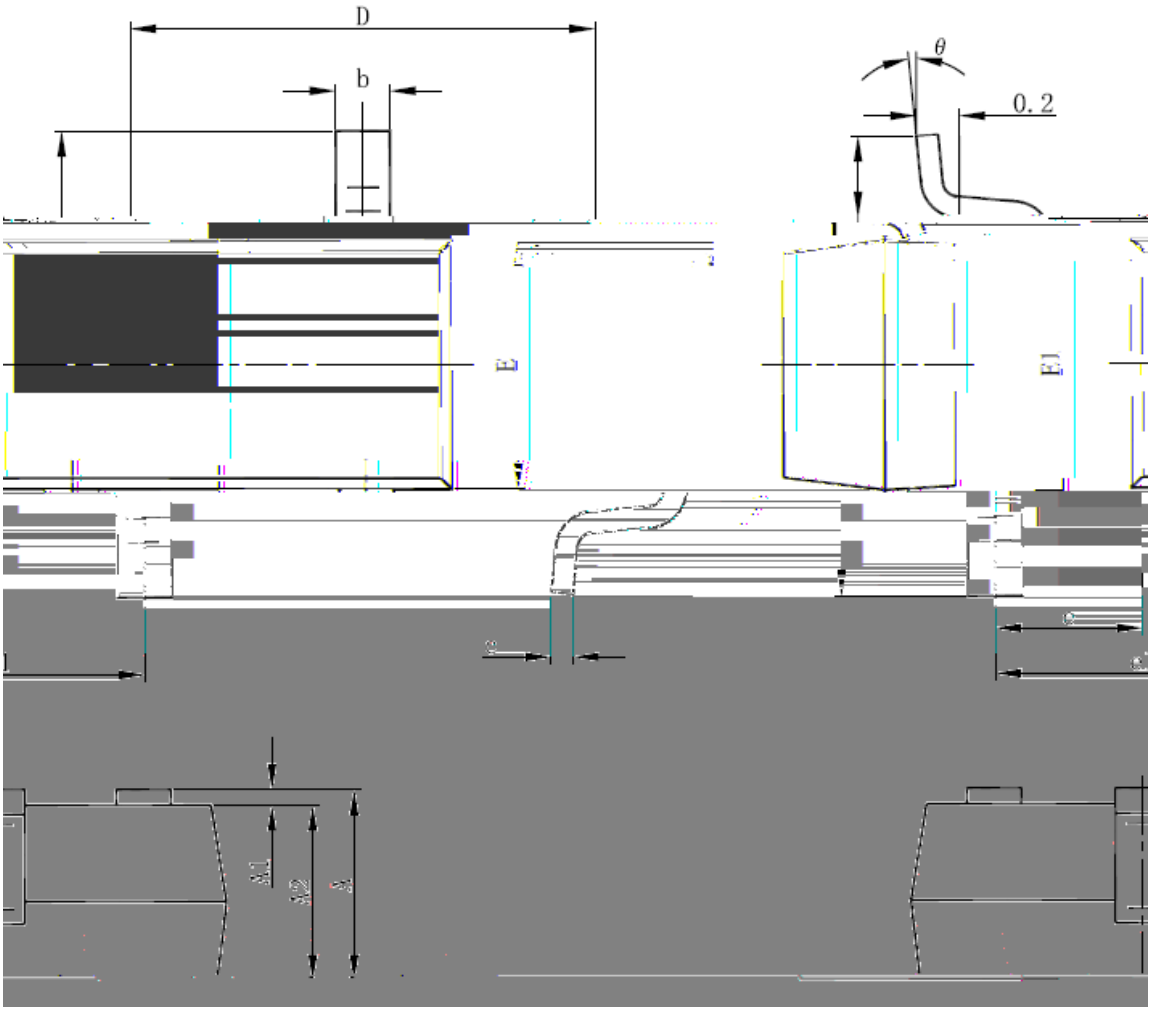

	Dimensions In Millimeters		Dimensions In Inches	
	Max		Max	
941	0.049	A	1.050	1.250
000	0.004	A1	0.000	0.100
941	0.045	A2	1.050	1.150
[illegible]	[illegible]	[illegible]	[illegible]	[illegible]
[illegible]	[illegible]	[illegible]	[illegible]	[illegible]
[illegible]	[illegible]	[illegible]	[illegible]	[illegible]
[illegible]	2.850	2.950	0.104	0.116
e	0.950(BSC)		0.037(BSC)	
e1	1.800	2.000	0.071	0.079
L	0.300	0.600	0.012	0.024

T

TO-92S

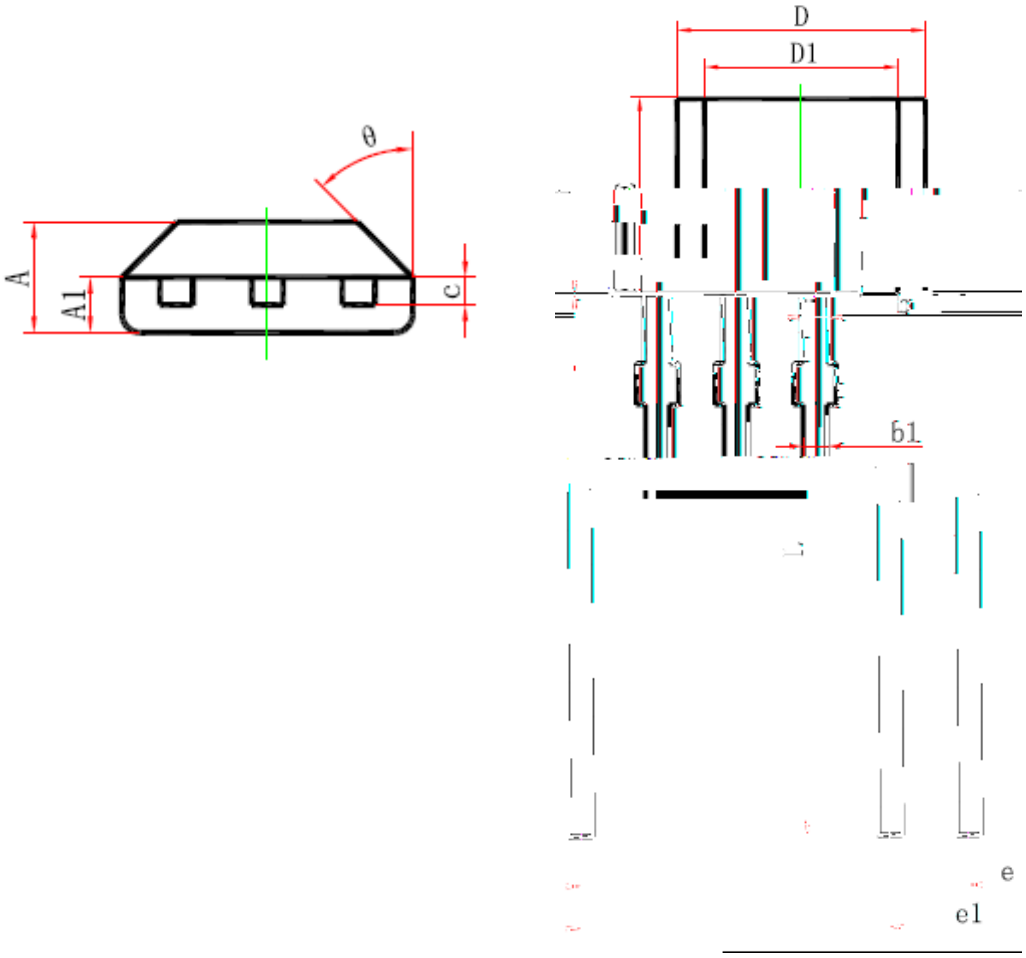

Symbol	Dimensions In Millimeters		Dimensions In Inches	
	Min	Max	Min	Max
A				
A1				
b				
b1				
c				
D				
D1				
e				
e1				
θ				

DFN2015-6

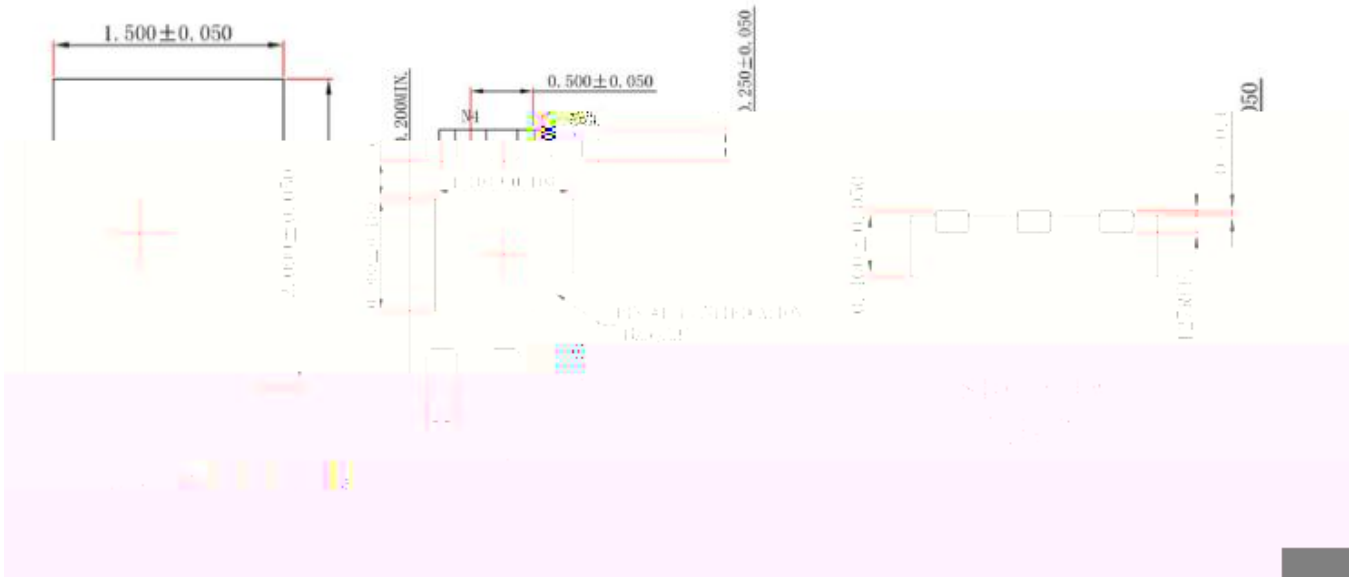

DFN2*2-3

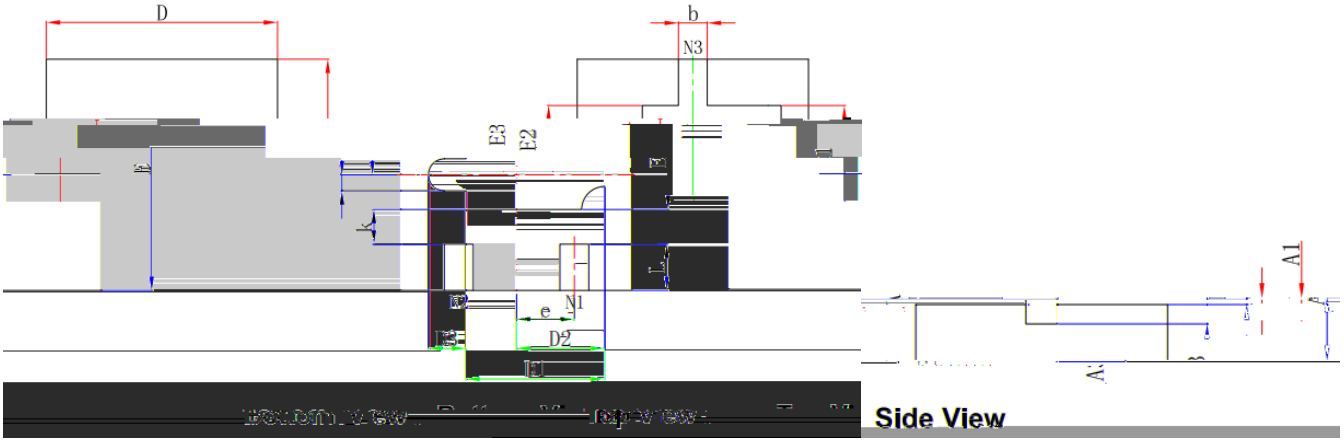

Dimensions In Millimeters			Dimensions In Inches		
	Min.	Max.		Min.	Max.
A	0.018/0.022	0.022/0.026	A	0.450/0.550	0.550/0.65
A1	0.000	0.022	A1	0.000	0.050
	0.076	0.082		1.924	2.076
	0.943	0.951		1.169	1.369
	0.030REF.			0.763REF.	
b	0.200	0.300		0.008	0.012
e	0.500TYP.			0.020TYP.	
L	0.324	0.476		0.013	0.019