■

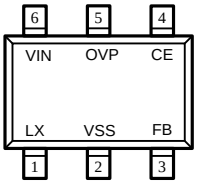

SOT23-6L
(TOP VIEW)

1	LX	SWITCH
2	VSS	
3	FB	
4	CE	
5	OVP	
6	VIN	

■

SOT23-6L

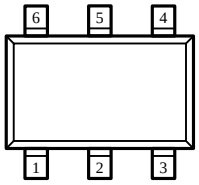

SOT23-6L
(TOP VIEW)

Y	LN2120****M*

	FB (V)
H0	200mV

0-9 A-Z 0-9 A-Z G I J O Q W

■

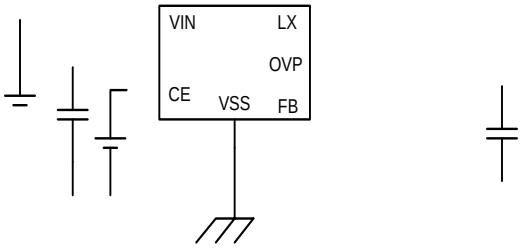

3

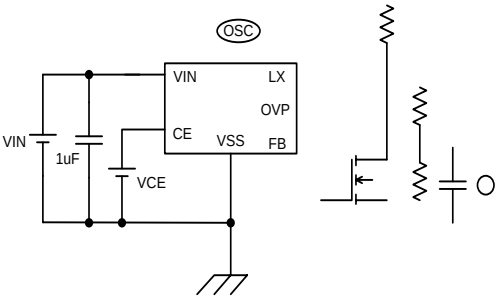

4

RLED=VFB/(ILED*n),VFB FB ILED=20mA n LED

■

1 FB

VIN=3.6 3*17 LED

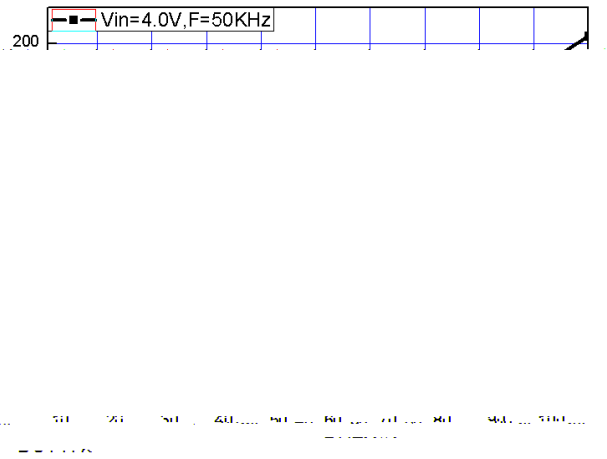

2 FB

V_{IN}= 4.0V LED=3*7

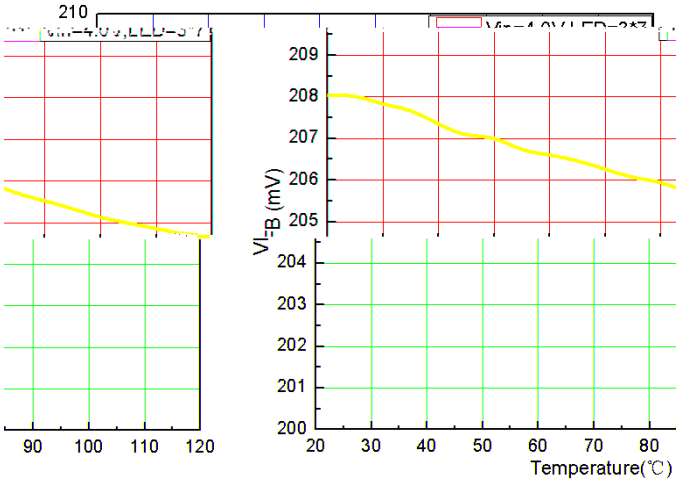

■

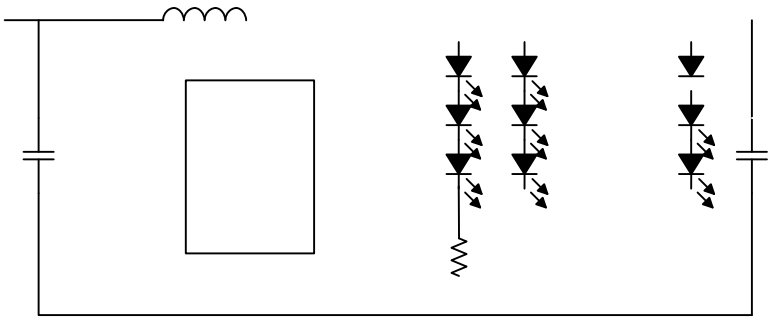

1uF 10uF

RLED

RLED=VFB/(ILED*n),VFB FB ILED=20mA n LED

PCB

PCB

■

SOT23-6L

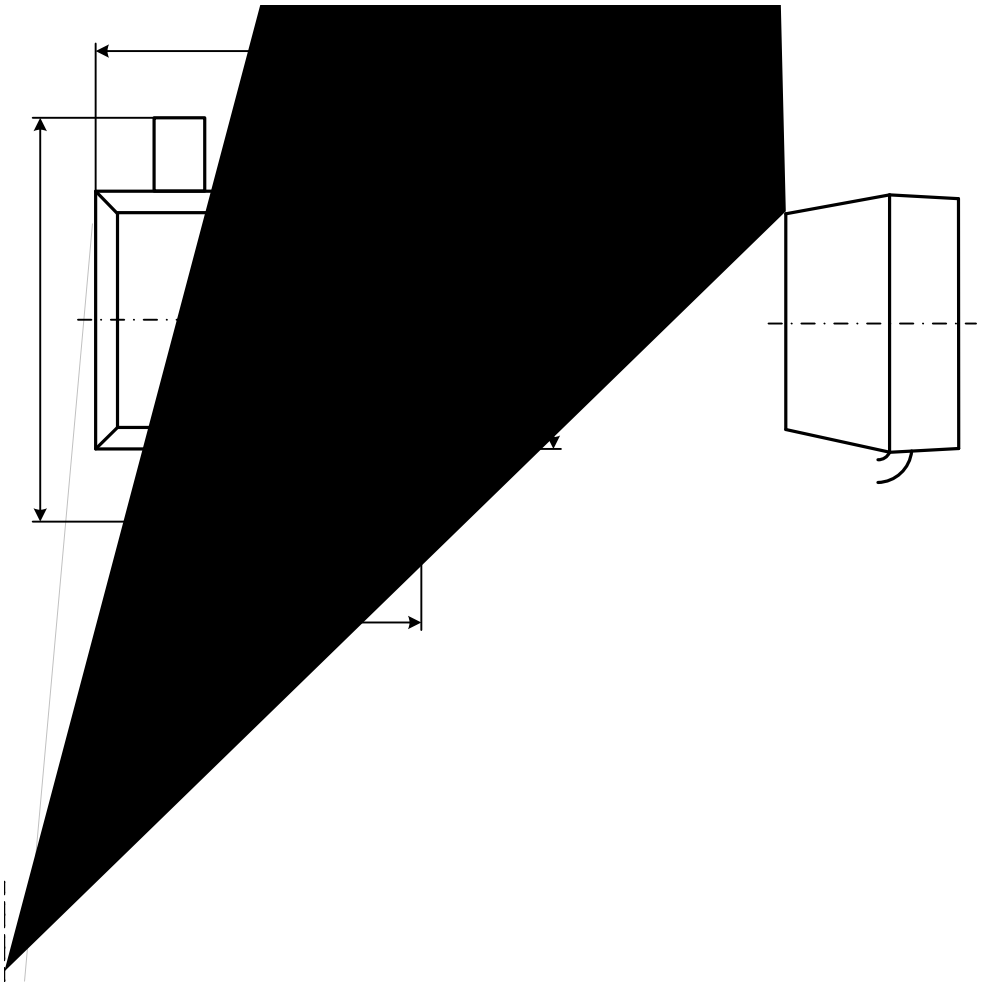

Symbol	Dimensions In Millimeters		Dimensions In Inches	
	Min	Max	Min	Max