7 , 3A Smart Universal Power Switch with Flag

■ General Description

The LN9703 is a low voltage, high performance single N-MOSFET power switch, designed for power rail on/off control with low RDS(ON)≈70mΩ and full protection functions. The LN9703 equipped with a charge pump circuitry to drive the internal MOSFET switch and a flag output is available to indicate fault conditions against large di/dt which may cause the supply to fall out of regulation. In order to fit different application, an ISET pin is offered for current limit point setting, a resistor from ISET to ground sets the current limit for the switch.

Additional features include soft-start to limit inrush current during plug-in, thermal shutdown to prevent catastrophic switch failure from high-current loads, Output anti back irrigation Protection whether EN pin is connected GND or VIN, under-voltage lockout (UVLO) to ensure that the device remains off unless there is a valid input voltage present, a precision resistor-programmable output current limit up to 3.5A. Besides, the lower quiescent current as 40μA making this device ideal for portable battery-operated equipment.

The LN9703 is available in SOT23-5 or SOP-8 package requiring minimum board space and smallest components.

■ Applications

USB 3G Datacard
USB Dongle
MiniPCI Accessories
LCD Monitor, LCD-TV
USB Power Module for ADSL
Information Appliance and Set-Top Box
Battery-Powered Equipment
Hot-Plug Power Supplies
ACPI Power Distribution
PCI Bus Power Switching
Motherboard & Notebook PCs
PC Card Hot Swap Application

■ Features

Adjustable Current Limiting up to 3.5A
Built-In (Typically 70mΩ) N-MOSFET
Reverse Current Flow Blocking (no body diode)
Output Can Be Forced Higher than Input (Off or On State)
Low Supply Current :
--------40μA Typical at Switch on State
--------Less than 1μA Typical at Switch Off State
Guaranteed Continuous Load Current
--------LN9703MR（SOT23-5）：2.1A
--------LN9703SR（SOP-8） ：3A
Wide Input Voltage Ranges : 2V to 5.5V
Open-Drain Fault Flag Output
Hot Plug-In Application (Soft-Start)
1.7V Typical Under-Voltage Lockout (UVLO)
Thermal Shutdown Protection
Smallest SOT23-5 and SOP-8 Package
RoHS Compliant and 100% Lead (Pb)-Free

■ Pin and Marking

LN9703MR

SOT-23-5L
(TopView)

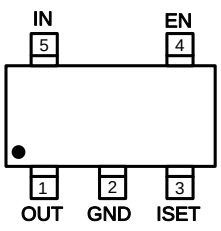

MARKING

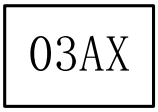

03----LN9703
A----die code
X----process code

LN9703SR

SOP-8
(TopView)

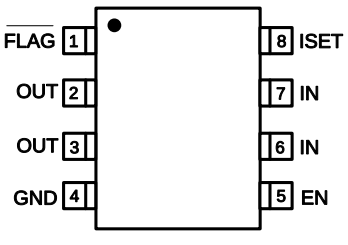

MARKING



LN9703SR----LN9703SR
XXXX----process code
X----lot code

■ Typical Application Circuit

Circuit 1：

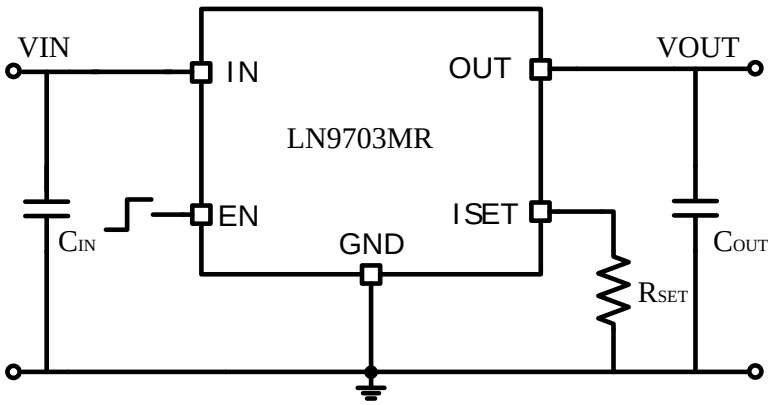

Circuit 2：

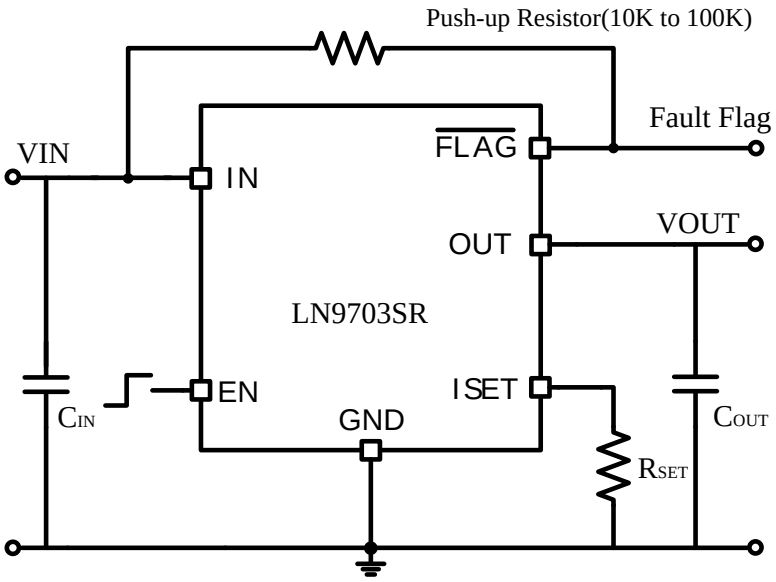

Note：

■ Package Information

SOT-23-5L

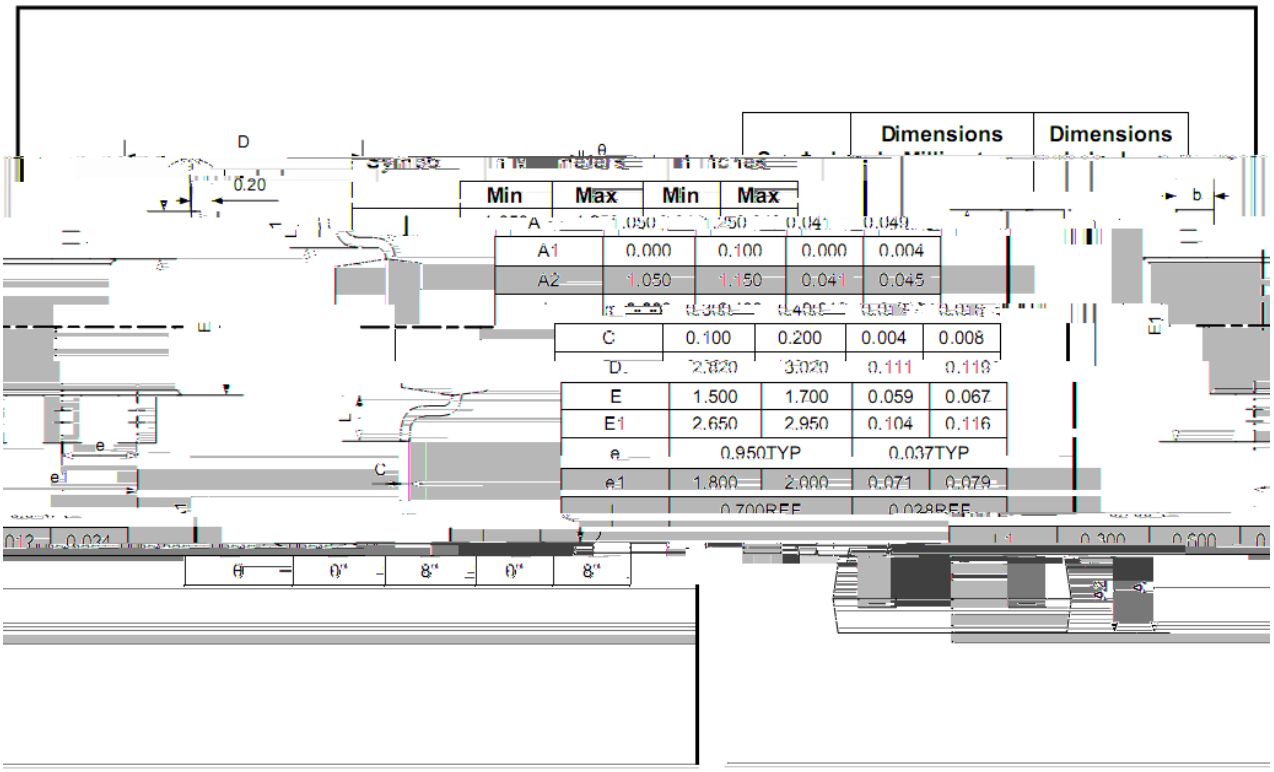

SOP8

